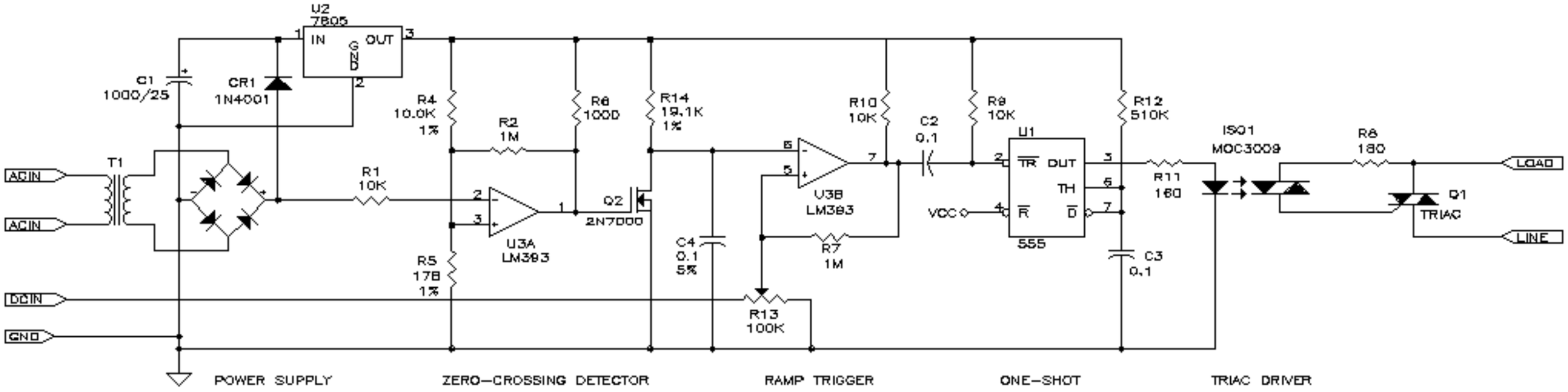
U2
7805
IN
OUT
GND
C1
1000/25
CR1
1N4001
T1
ACIN
ACIN
DCIN
GND
R1
10K
R4
10.0K
1%
R5
178
1%
R2
1M
U3A
LM393
R6
1000
Q2
2N7000
R14
19.1K
1%
C4
0.1
5%
R13
100K
U3B
LM393
R7
1M
R10
10K
C2
0.1
VCC
R9
10K
U1
TR
OUT
TH
R
D
555
R12
510K
C3
0.1
R11
160
ISO1
MOC3009
R8
180
Q1
TRIAC
LOAD
LINE
POWER SUPPLY
ZERO-CROSSING DETECTOR
RAMP TRIGGER
ONE-SHOT
TRIAC DRIVER