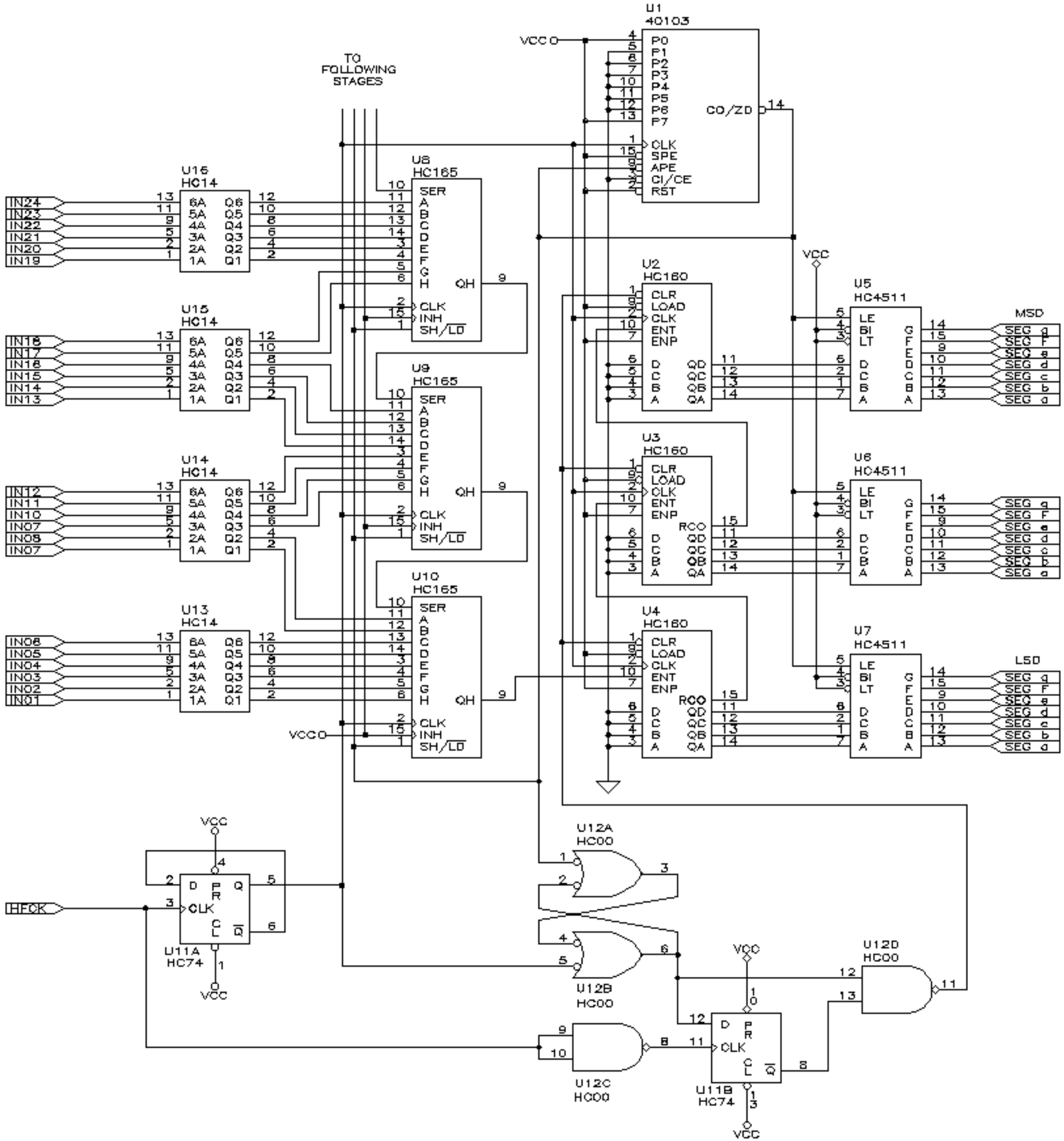
U1
40103
VCC
TO FOLLOWING STAGES
P0
P1
P2
P3
P4
P5
P6
P7
CO/ZD
CLK
SPE
APE
CI/CE
RST
U16
HC14
U15
HC14
U14
HC14
U13
HC14
U8
HC165
U9
HC165
U10
HC165
SER
A
B
C
D
E
F
G
H
QH
CLK
INH
SH/LD
U2
HC160
U3
HC160
U4
HC160
CLR
LOAD
ENT
ENP
RCO
QD
QC
QB
QA
U5
HC4511
U6
HC4511
U7
HC4511
LE
BI
LT
MSD
LSD
SEG a
SEG b
SEG c
SEG d
SEG e
SEG f
SEG g
IN24
IN23
IN22
IN21
IN20
IN19
IN18
IN17
IN16
IN15
IN14
IN13
IN12
IN11
IN10
IN09
IN08
IN07
IN06
IN05
IN04
IN03
IN02
IN01
HFCK
U11A
HC74
U11B
HC74
U12A
HC00
U12B
HC00
U12C
HC00
U12D
HC00